PRODUCT STANDARD

Part Number	SP－15 32Ω
Type	Dynamic Speaker (moving coil)

Outer Appearance and Dimensions

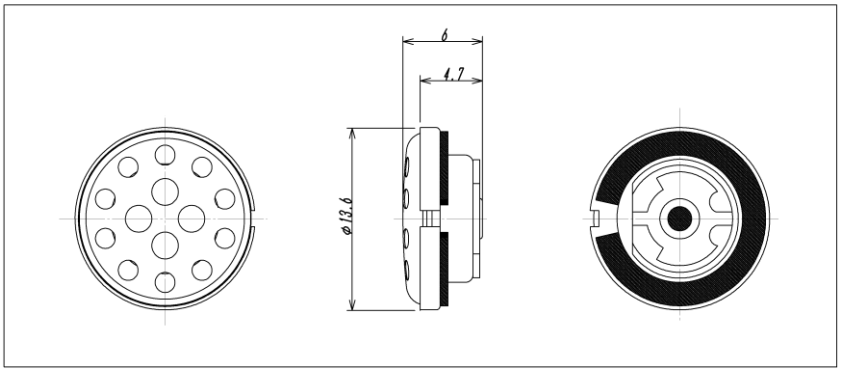

Frequency Response

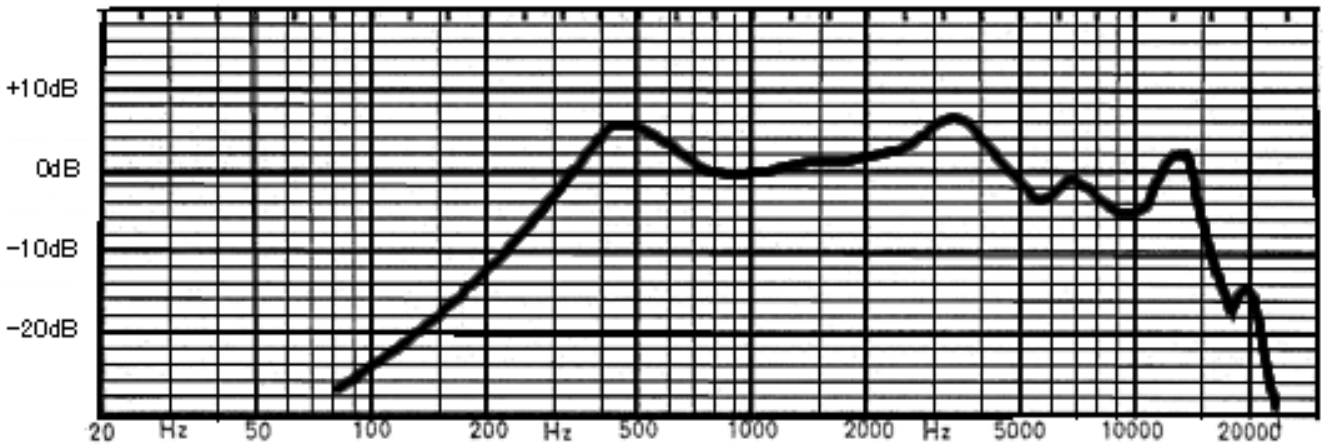

Electrical Specifications

Impedance	32Ω ±15%	at 1kHz
Output sound pressure level	96dB ±3dB	at 1mW ／ 1kHz
Rated input	10mW	
Maximum allowable input	30mW	
Frequency Range	300 ～ 15kHz	
Weight	2g	

Notice

Measuring method Measurement by B & K population ears 4153. Measurement input 1mW
Diaphragm with protective cover

			Nov 28 2018	Trigonometry	unit〔mm〕	scale free	No	
			MODEL	SP－15 32Ω SPACIFICATION		Four-Leaf Co. LTD.		